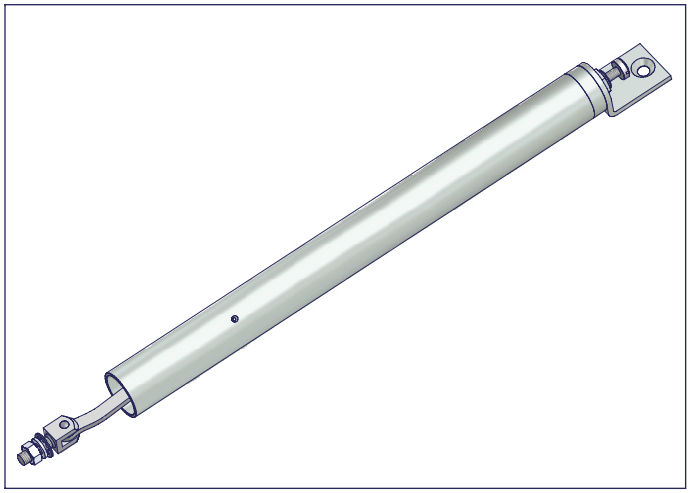

ATS-400-K

Door closer

SCHNETZ

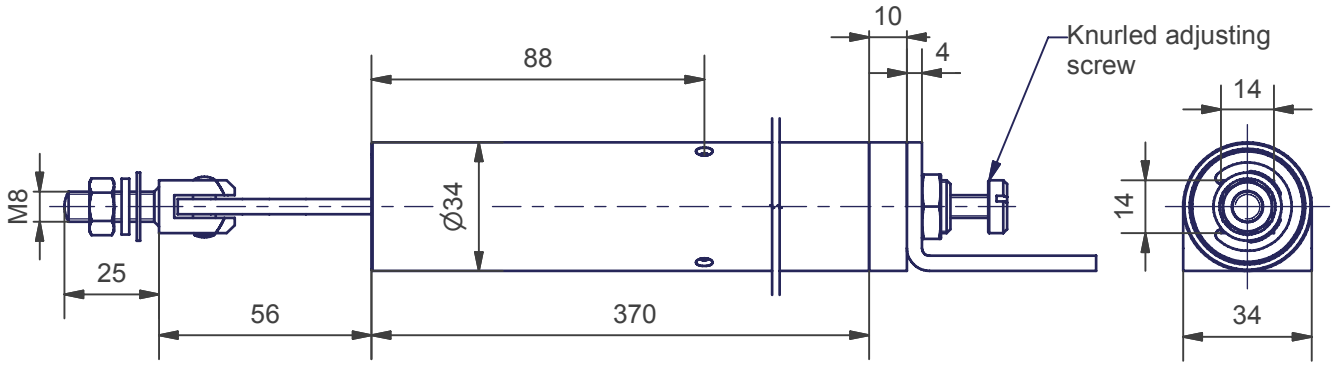

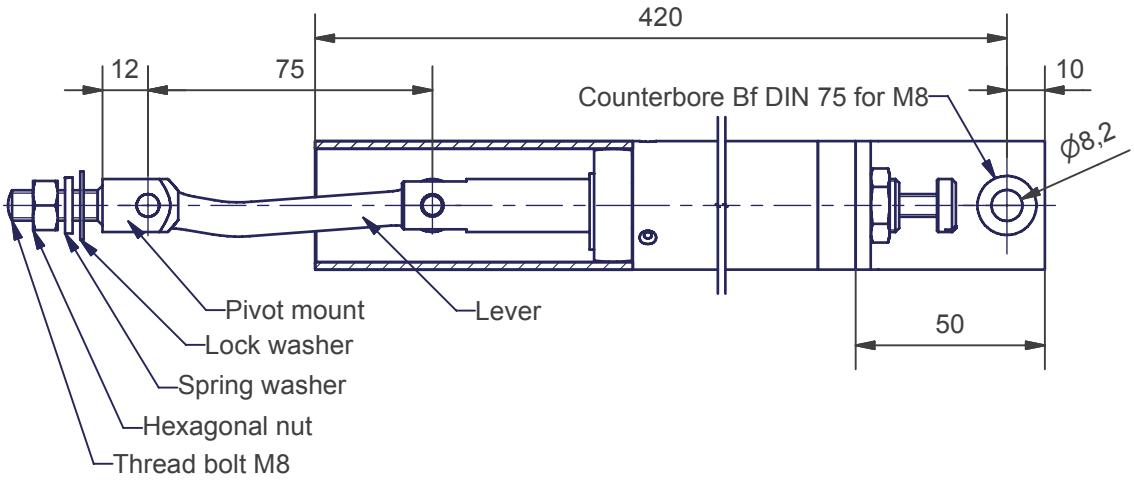

Specification	Automatic door closer with hydraulic damping
Application	Left or right hinged lift doors with invisible bands
Mounting	In a recess along the top edge of the door (look at the following mounting instructions)
Opening force	36 N (applied to 1m radius)
Closing force	11 N (applied to 1m radius)
Door width	800 mm max
Opening angle	100°
Ambient temperature	-15 °C up to +40 °C
Weight	1,72 kg

Albert Schnetz
Geisenhausenerstraße 20
81379 Munich,Germany

Tel 089 / 748 901-0
Fax 089 / 748 901-20

http://www.schnetz.de
info@schnetz.

Version 03/2010

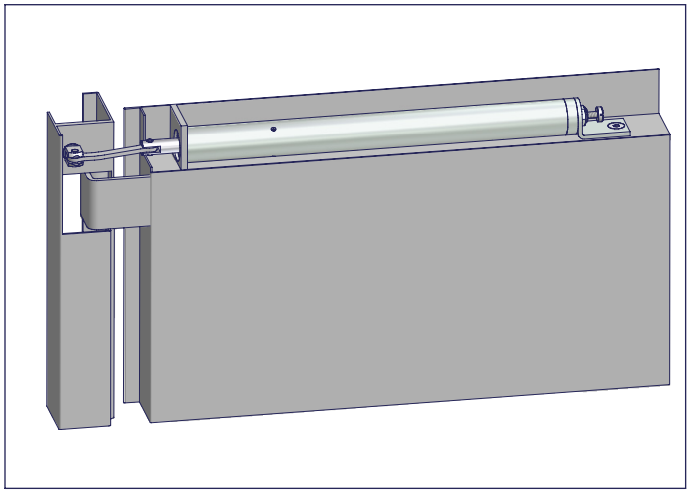

Mounting instructions

ATS-400-K

SCHNETZ

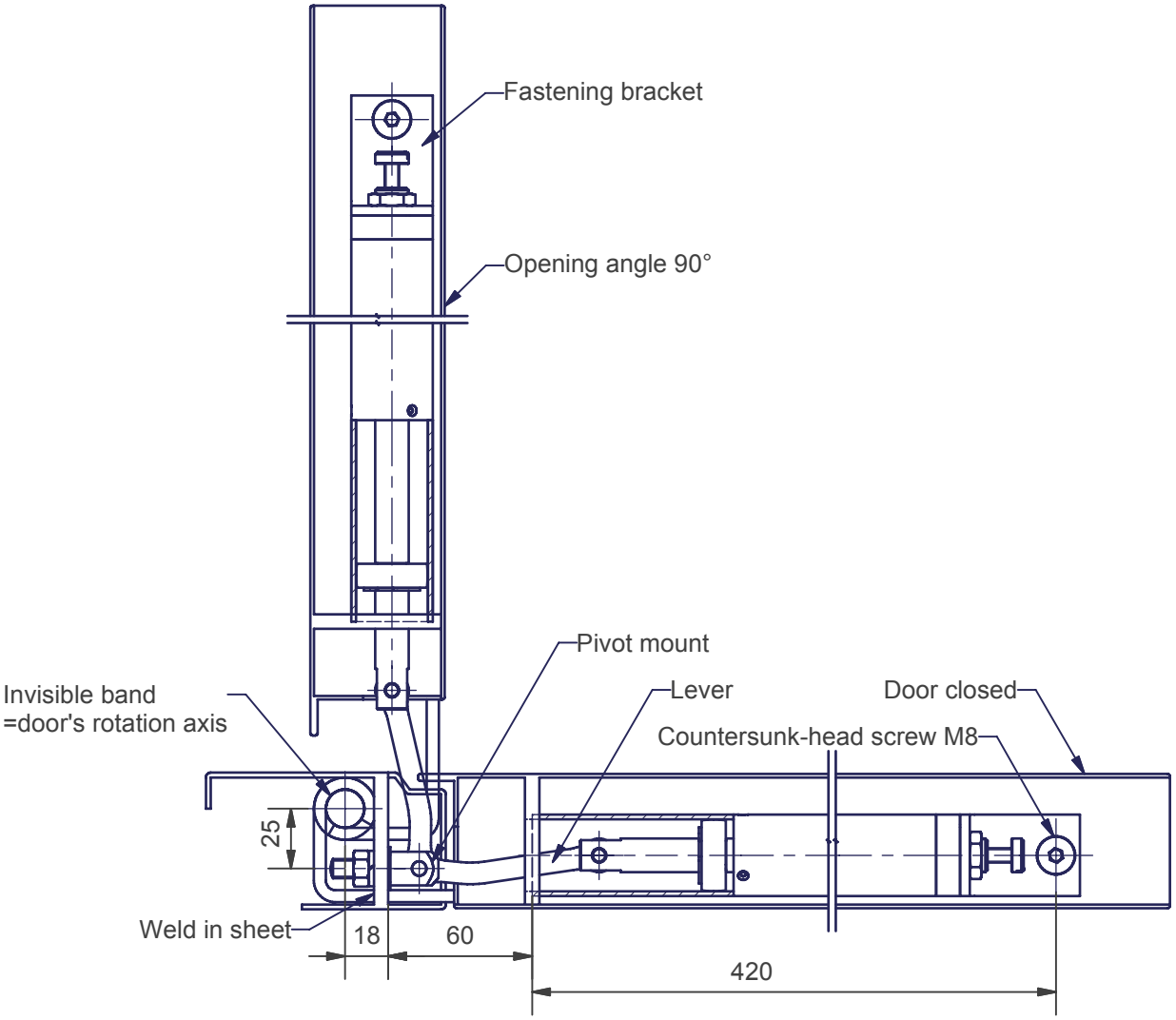

Fixation of tube	With countersunk-head screw M8 at fastening bracket and mounting support at open end of tube
Fixation of pivot mount	Turn pivot mount with an open-end wrench,size 14 until it´s slot lies horizontal and the lever´s knee points away from the door´s rotation axis. Close the door slowly while putting the thread bolt M8x24 with it´s lock washer into the drill hole ø 8,2 of the weld in sheet. Put the hexagon nut with it´s spring washer on the thread bolt, while the door is closed and fasten it just moderate. Caution: lever must not pervert.
Start up	Open the door carfully as far as you catch hold of the pivot mount with the open end wrench, size 14. After that fasten the hexagonal nut 20Nm±2Nm firmly.
Adjustment	Regulate the final damping by turning the knurled adjusting screw at the end of the cylinder.

Albert Schnetz
Geisenhausenerstraße 20
81379 Munich,Germany

Tel 089 / 748 901-0
Fax 089 / 748 901-20

http://www.schnetz.de
info@schnetz.

Version 03/2010

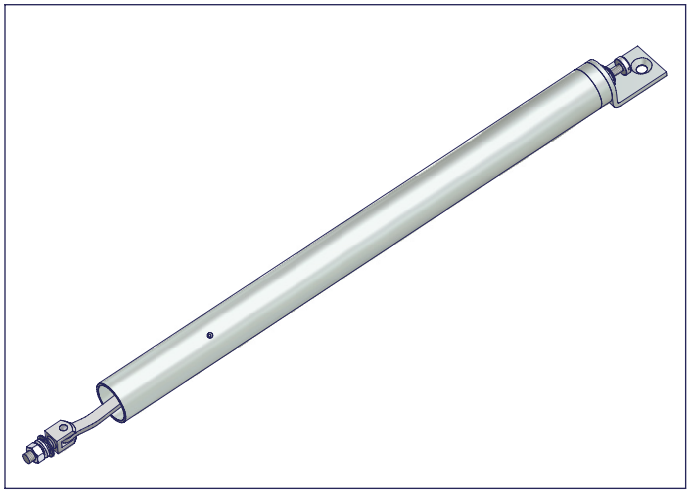

ATS-400

Door closer

SCHNETZ

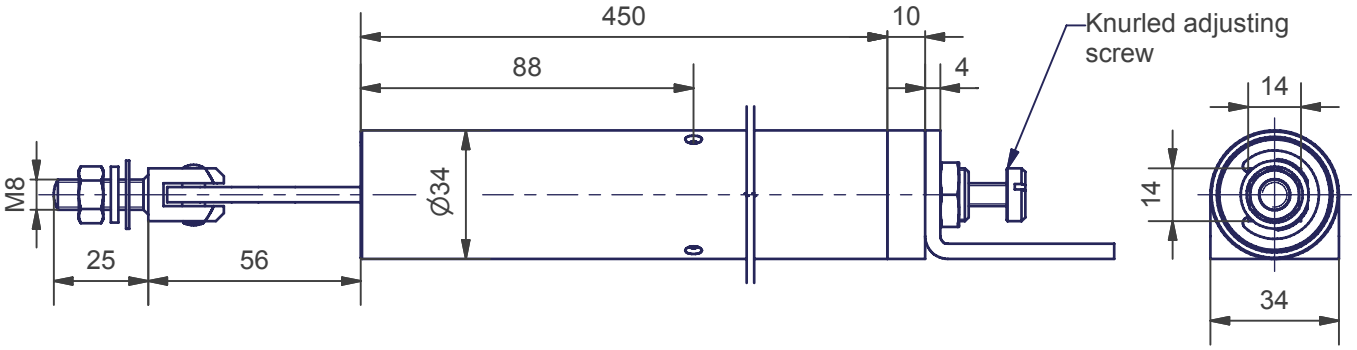

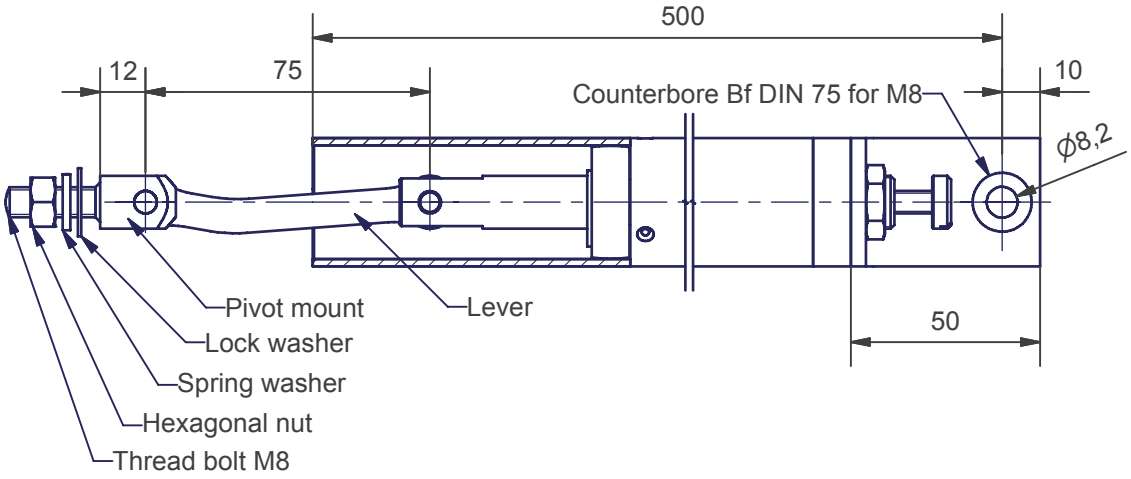

Specification	Automatic door closer with hydraulic damping
Application	Left or right hinged lift doors with invisible bands
Mounting	In a recess along the top edge of the door (look at the following mounting instructions)
Opening force	30 N (applied to 1m radius)
Closing force	11 N (applied to 1m radius)
Door width	1000 mm max
Opening angle	90°
Ambient temperature	-15 °C up to +40 °C
Weight	2,06 kg

Albert Schnetz
Geisenhausenerstraße 20
81379 Munich,Germany

Tel 089 / 748 901-0
Fax 089 / 748 901-20

http://www.schnetz.de
info@schnetz.

Version 03/2010

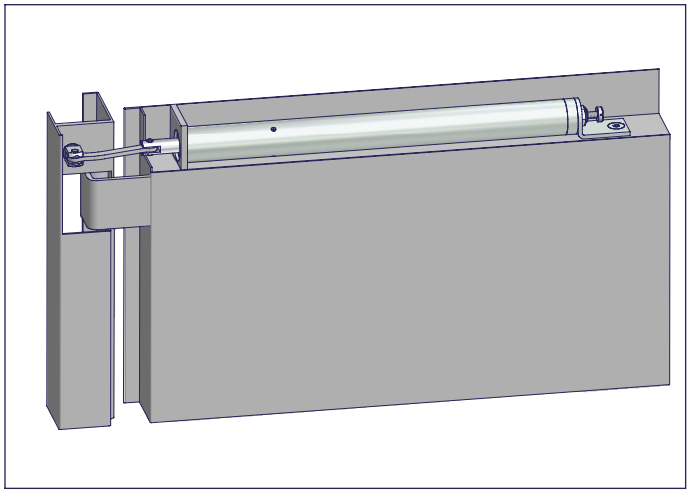

Mounting instructions

ATS-400

SCHNETZ

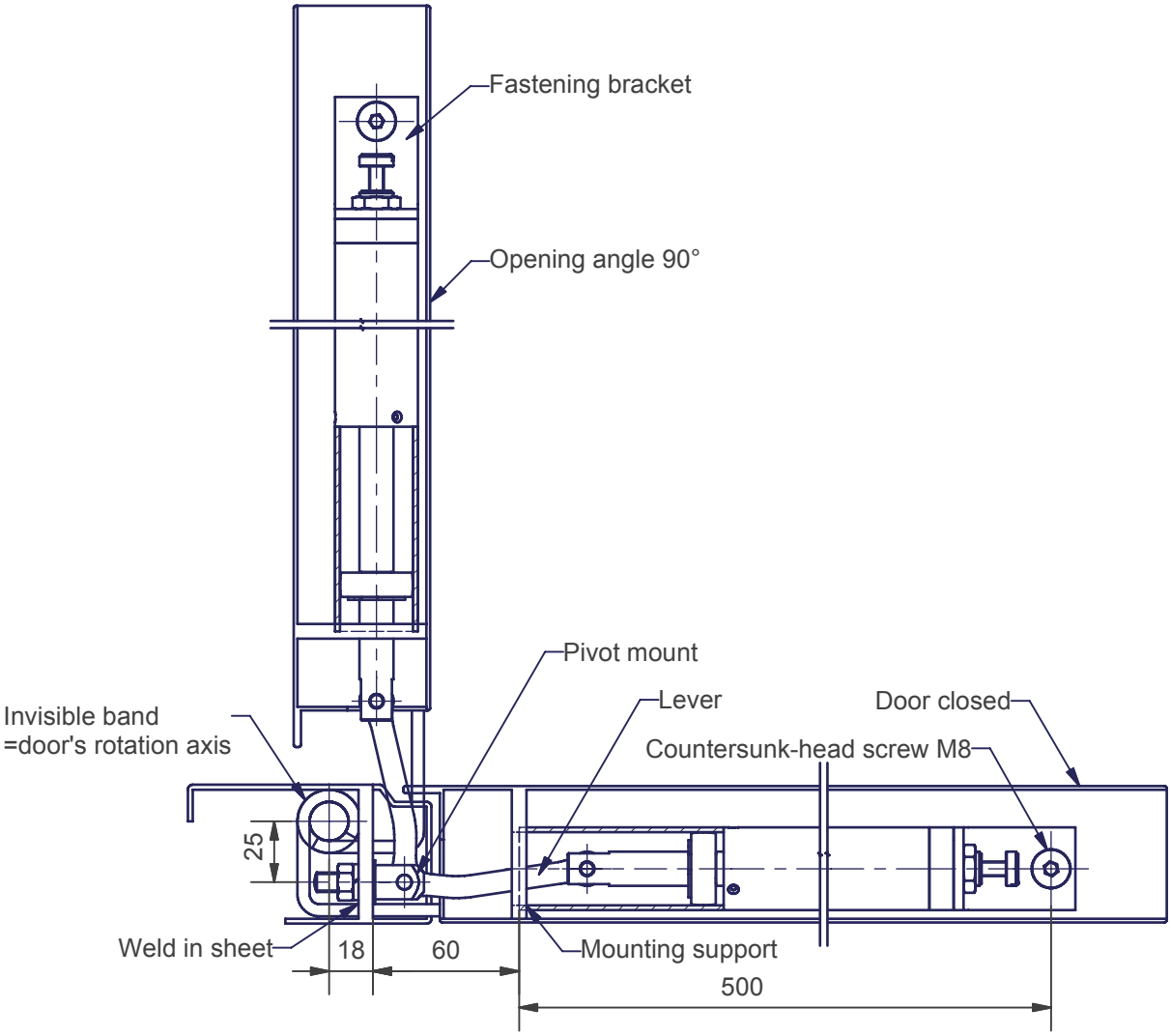

Fixation of tube	With countersunk-head screw M8 at fastening bracket and mounting support at open end of tube
Fixation of pivot mount	Turn pivot mount with an open-end wrench,size 14 until it´s slot lies horizontal and the lever´s knee points away from the door´s rotation axis. Close the door slowly while putting the thread bolt M8x24 with it´s lock washer into the drill hole ø 8,2 of the weld in sheet. Put the hexagon nut with it´s spring washer on the thread bolt, while the door is closed and fasten it just moderate. Caution: lever must not pervert.
Start up	Open the door carfully as far as you catch hold of the pivot mount with the open end wrench, size 14. After that fasten the hexagonal nut 20Nm±2Nm firmly.
Adjustment	Regulate the final damping by turning the knurled adjusting screw at the end of the cylinder.

Albert Schnetz
Geisenhausenerstraße 20
81379 Munich,Germany

Tel 089 / 748 901-0
Fax 089 / 748 901-20

http://www.schnetz.de
info@schnetz.

Version 03/2010

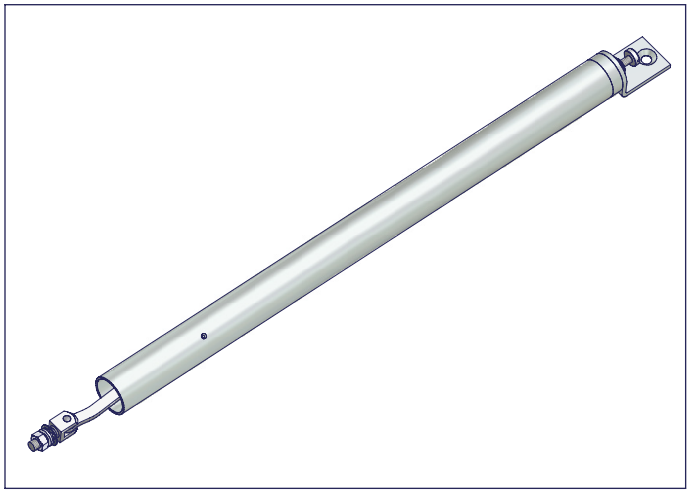

ATS-800

Door closer

SCHNETZ

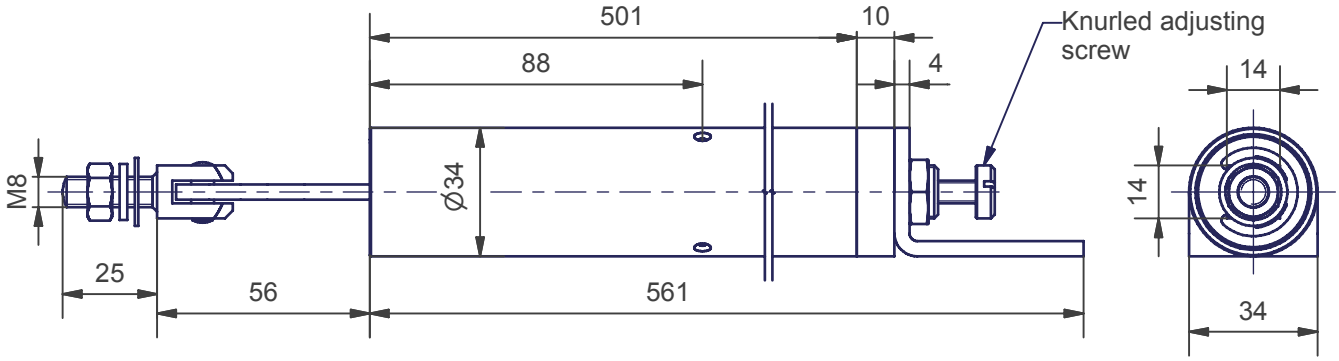

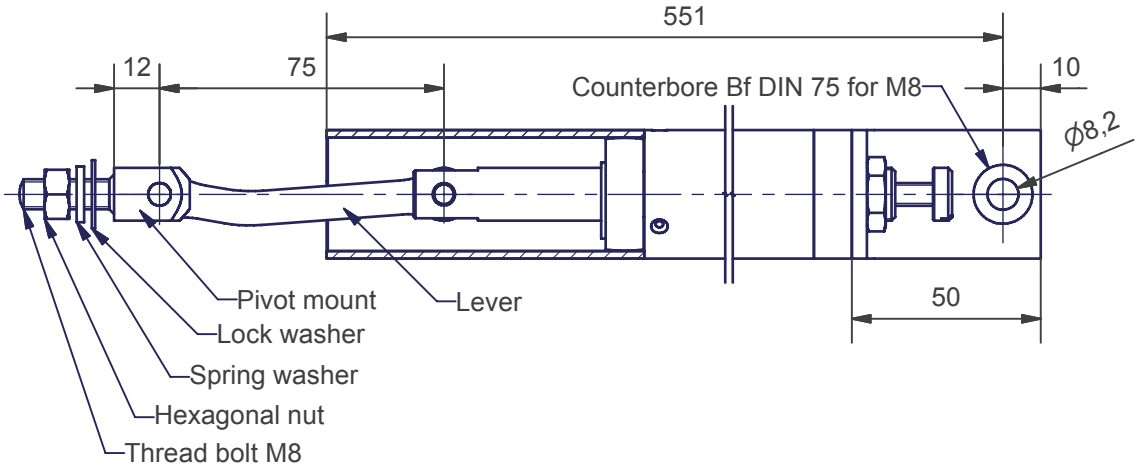

Specification	Automatic door closer with hydraulic damping
Application	Left or right hinged lift doors with invisible bands
Mounting	In a recess along the top edge of the door (look at the following mounting instructions)
Opening force	42 N (applied to 1m radius)
Closing force	16 N (applied to 1m radius)
Door width	1200 mm max
Opening angle	115°
Ambient temperature	-15 °C up to +40 °C
Weight	2,375kg

Albert Schnetz
Geisenhausenerstraße 20
81379 Munich,Germany

Tel 089 / 748 901-0
Fax 089 / 748 901-20

http://www.schnetz.de
info@schnetz.

Version 03/2010

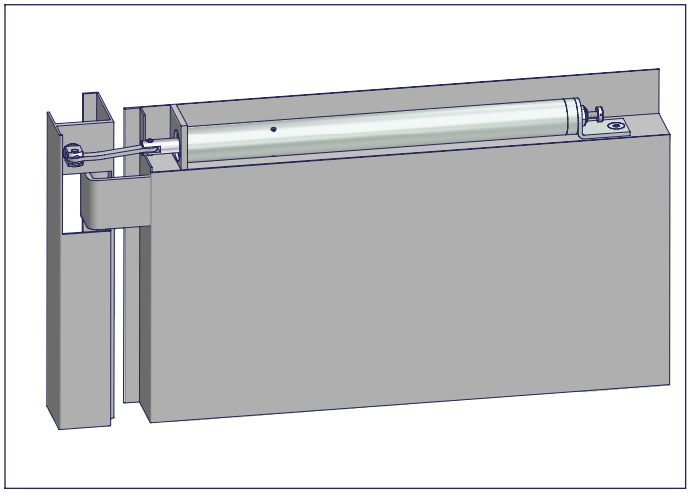

Mounting instructions

ATS-800

SCHNETZ

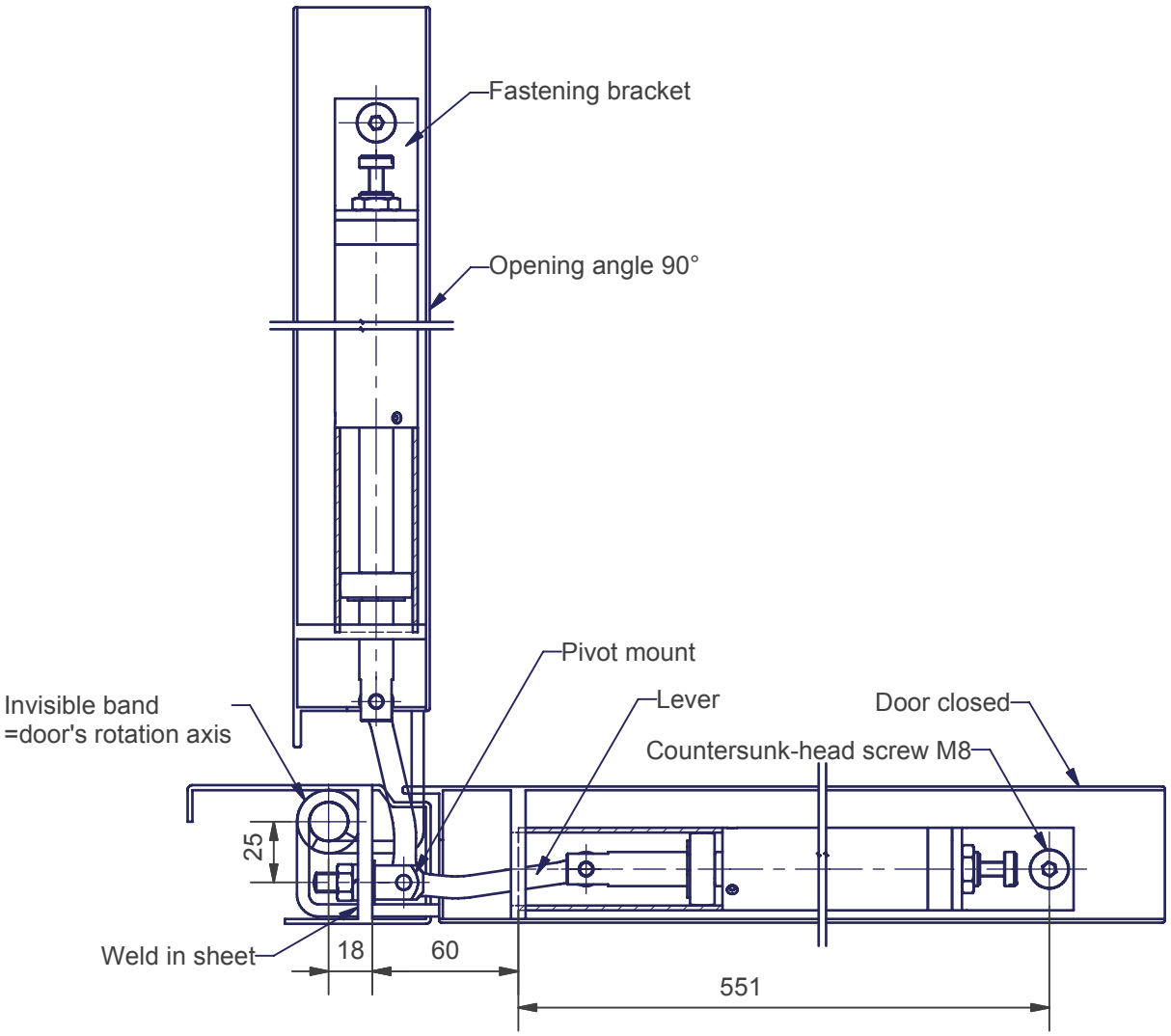

Fixation of tube	With countersunk-head screw M8 at fastening bracket and mounting support at open end of tube
Fixation of pivot mount	Turn pivot mount with an open-end wrench,size 14 until it´s slot lies horizontal and the lever´s knee points away from the door´s rotation axis. Close the door slowly while putting the thread bolt M8x24 with it´s lock washer into the drill hole ø 8,2 of the weld in sheet. Put the hexagon nut with it´s spring washer on the thread bolt, while the door is closed and fasten it just moderate. Caution: lever must not pervert.
Start up	Open the door carfully as far as you catch hold of the pivot mount with the open end wrench, size 14. After that fasten the hexagonal nut 20Nm±2Nm firmly.
Adjustment	Regulate the final damping by turning the knurled adjusting screw at the end of the cylinder.

Albert Schnetz
Geisenhausenerstraße 20
81379 Munich,Germany

Tel 089 / 748 901-0
Fax 089 / 748 901-20

http://www.schnetz.de
info@schnetz.

Version 03/2010